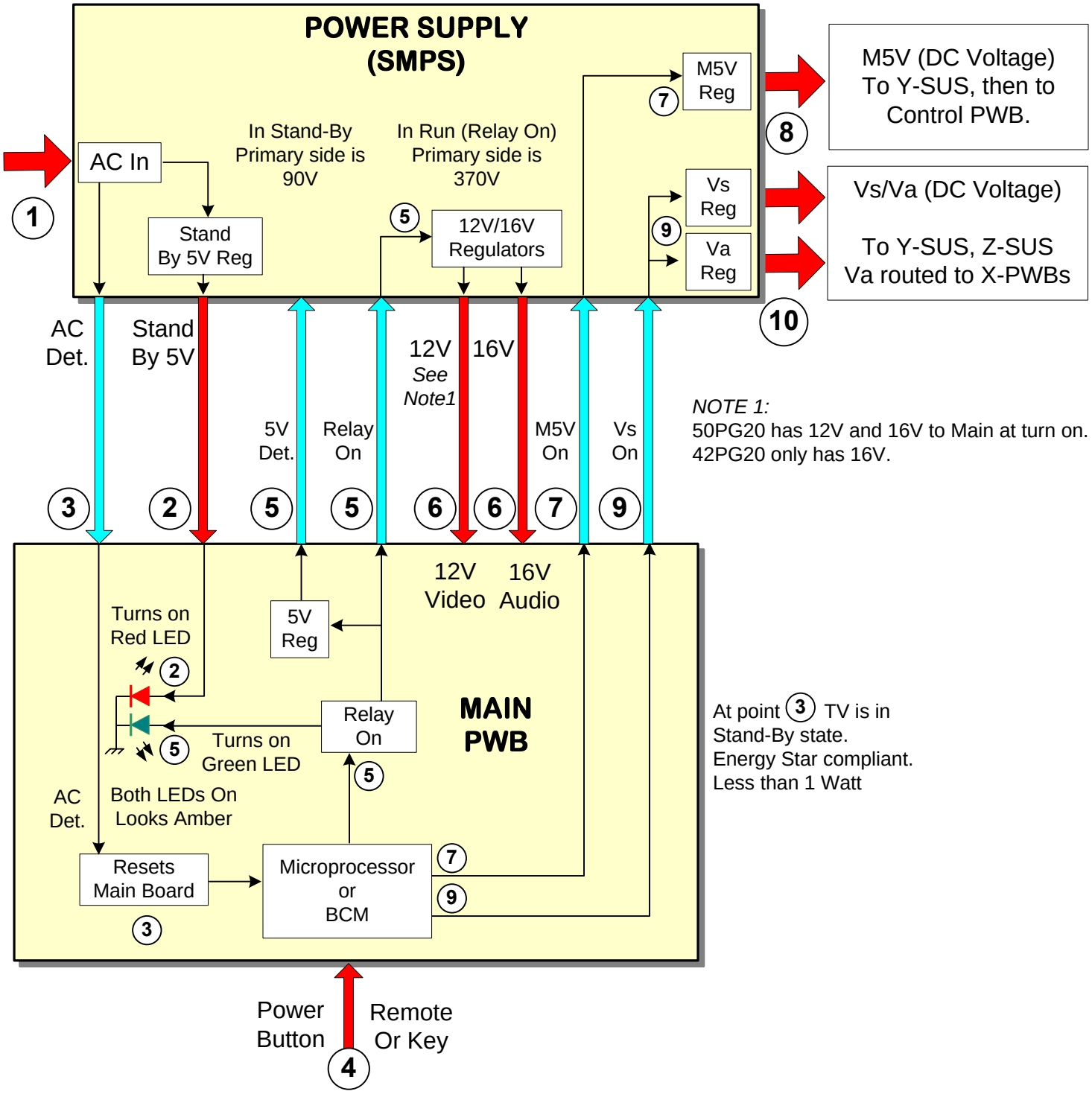50PG20/42PG20 POWER SUPPLY
TURN ON COMMANDS FROM MAIN PWB